IL'O'CERF 7

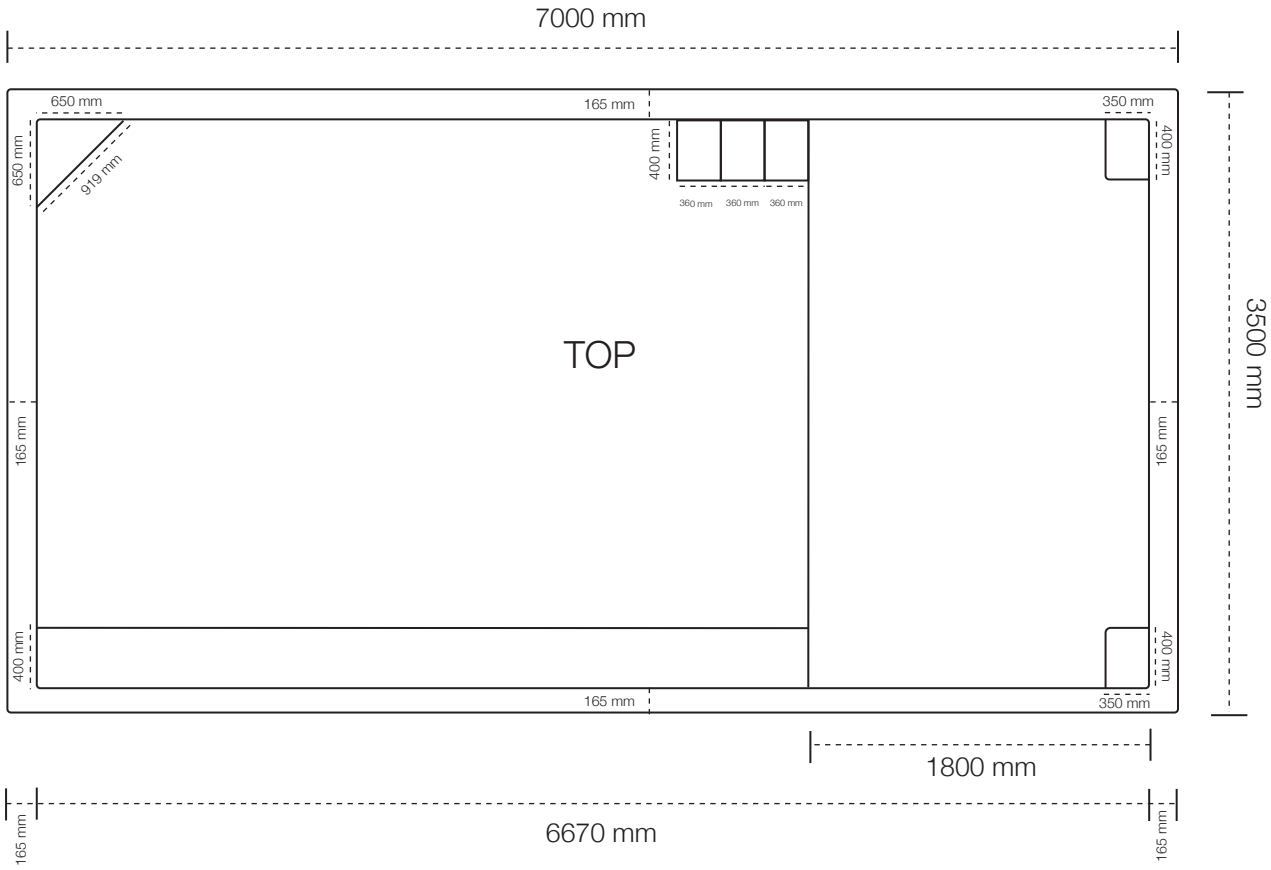
7000 mm
650 mm
165 mm
350 mm
650 mm
919 mm
400 mm
360 mm
360 mm
360 mm
400 mm
TOP
3500 mm
165 mm
165 mm
400 mm
400 mm
165 mm
350 mm
1800 mm
165 mm
6670 mm
165 mm

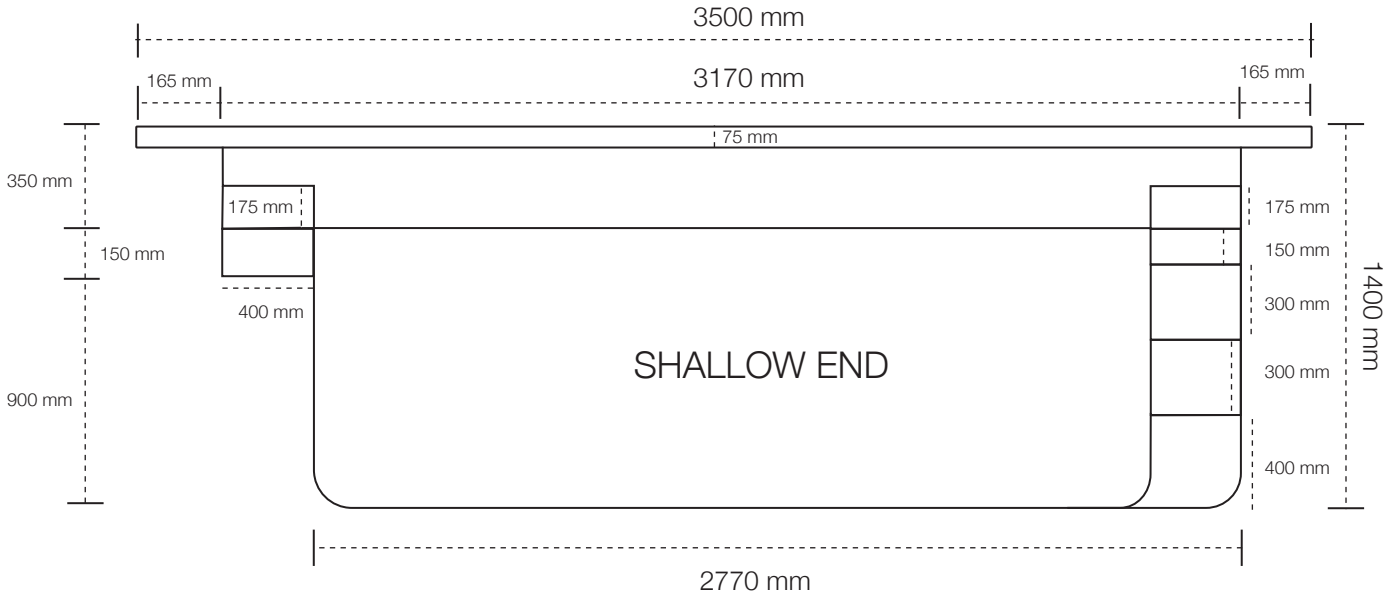
3500 mm
165 mm
3170 mm
165 mm
75 mm
350 mm
175 mm
175 mm
150 mm
150 mm
400 mm
300 mm
1400 mm
SHALLOW END
300 mm
900 mm
400 mm
2770 mm

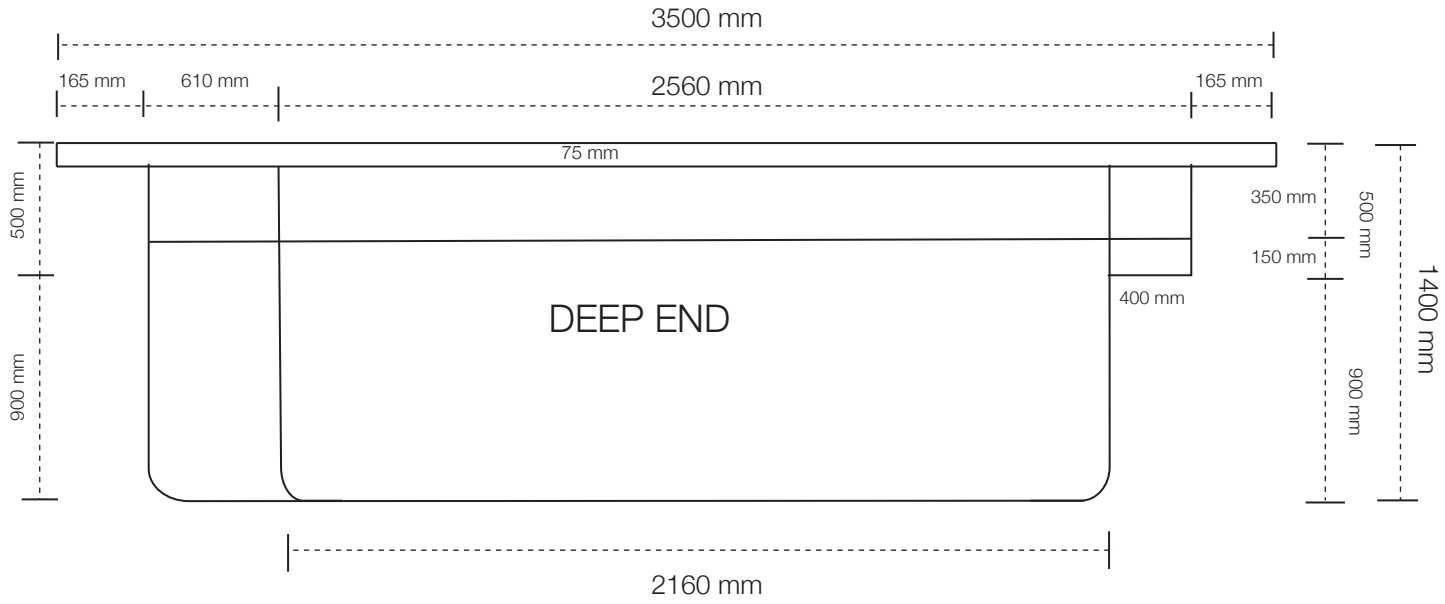
3500 mm
165 mm
610 mm
2560 mm
165 mm
75 mm
500 mm
900 mm
350 mm
150 mm
400 mm
500 mm
900 mm
1400 mm
DEEP END
2160 mm

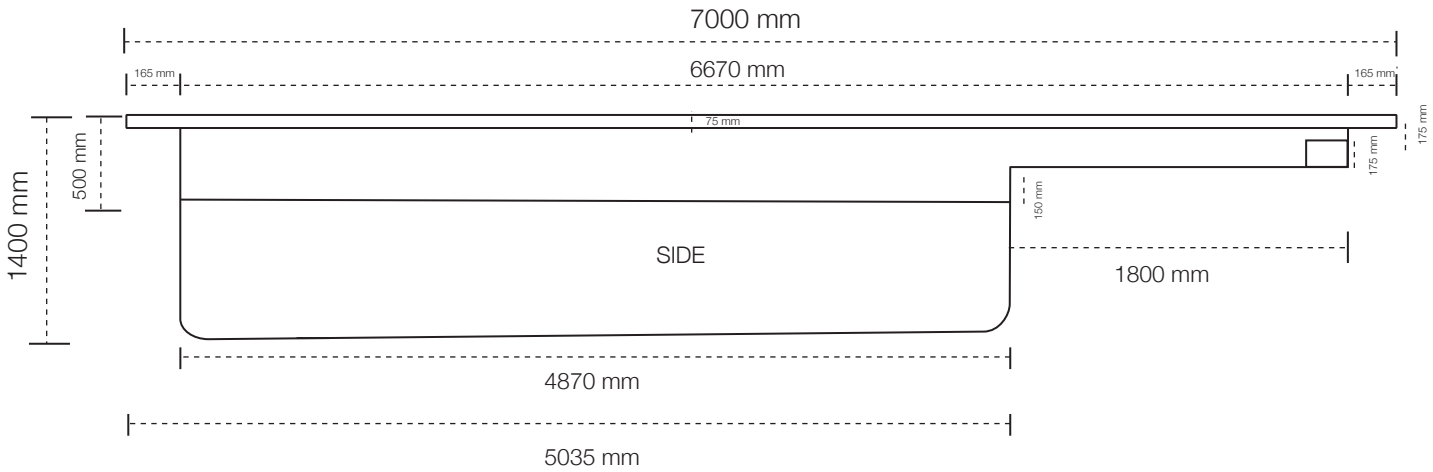
7000 mm
165 mm
6670 mm
165 mm
75 mm
175 mm
175 mm
150 mm
1400 mm
500 mm
SIDE
1800 mm
4870 mm
5035 mm

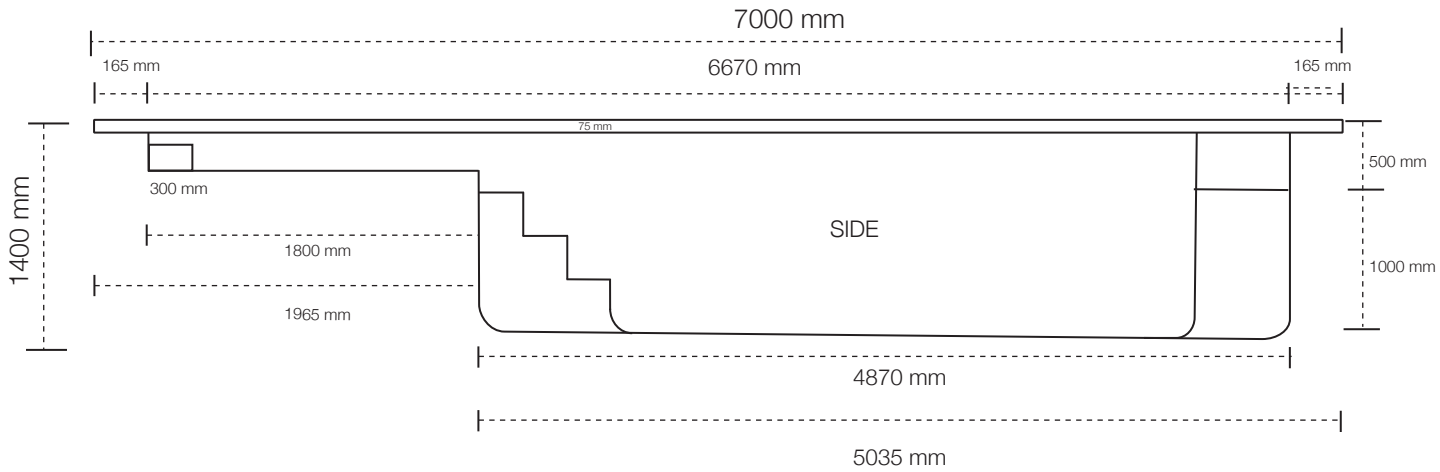
7000 mm
165 mm
6670 mm
165 mm
75 mm
300 mm
1400 mm
1800 mm
1965 mm
SIDE
500 mm
1000 mm
4870 mm
5035 mm